Instruction Manual

DIN-4C

4 Channel Curtain/Blind Controller

2026
Version 1.0.4

UK CA MADE IN BRITAIN

Contents

1 What is the DIN-4C? ... 3
1.1 Product Image ... 3
1.2 Product Features ... 3
1.3 Load Types ... 3
1.4 Circuit Separation ... 4
1.5 Example DIN System ... 4
2 Panel Overview ... 5
3 DIN-LINK Modules ... 5
4 Installation Instructions ... 7
5 Servicing the DIN-4C ... 9
6 Programming the DIN-4C ... 9
7 LED Diagnostics ... 9
7.1 Display ... 9
7.2 Output LEDs ... 10
8 Installation Guidelines ... 11
8.1 Electrical Isolation ... 11
8.2 Mounting ... 11
8.3 Enclosure and Environmental Protection ... 11
8.4 Maximum and Minimum Loadings ... 11
8.5 Overcurrent Protection ... 11
8.6 Wiring ... 11
8.7 Ventilation and Cooling ... 11
8.8 Compatibility ... 12
8.9 Third-Party Accessories and Equipment ... 12
8.10 Sound Pressure Levels ... 12
Appendix 1 - Wiring Options ... 13
Appendix 2 - Relay Programming Menu ... 14
Appendix 3 - Mixed Voltage Separation Example ... 16

1 What is the DIN-4C?

1.1 Product Image

1.2 Product Features

- Four channels of dual-relay outputs for curtain/blind motors
- Momentary or latching action relays with automatic timeout
- Controlled via the Rako Wired Network using keypads such as the WK-MOD or WCM.
- Controlled by Rako Wireless Keypads, such as the RK-MOD and RNC, when used in conjunction with a WK-HUB or WRB100

1.3 Load Types

Load Type	Load Voltage	Max Load
AC Motor	230VAC	1.5A/Channel
DC Motor	12V DC – 24V DC	1.5A/Channel
Dry Contact	Not Relevant	Not Relevant

1.4 Circuit Separation

It is not advisable to mix low voltage (LV) and separated extra-low voltage (SELV) circuits on the same module. If both voltage types must be connected to the same module, a minimum separation of one unused channel must be maintained between LV and SELV voltages.

1.5 Example DIN System

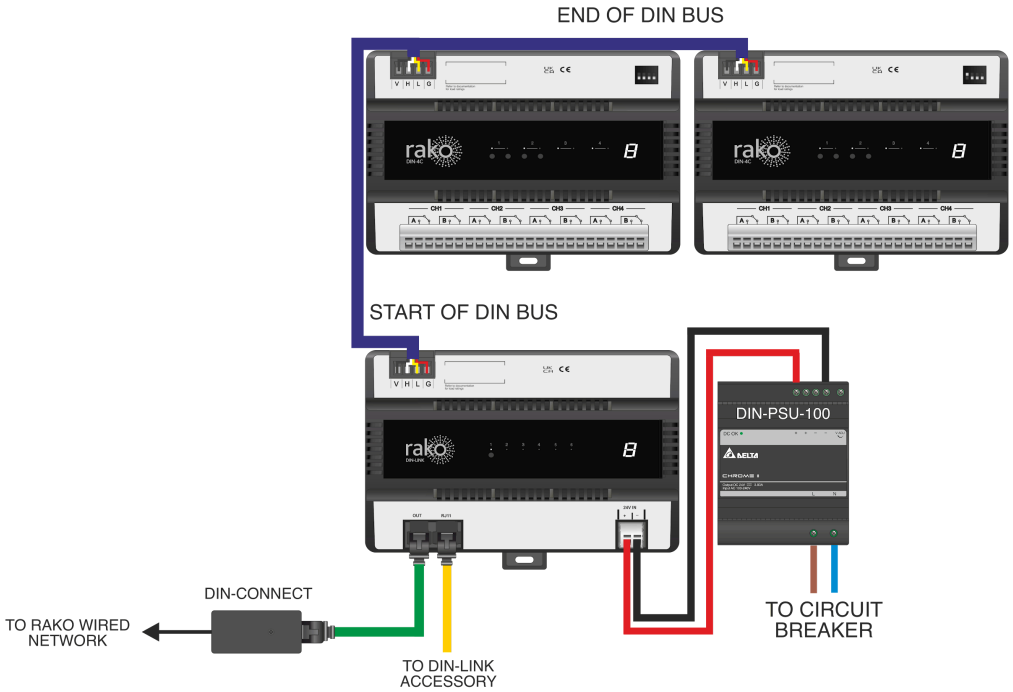

2 Panel Overview

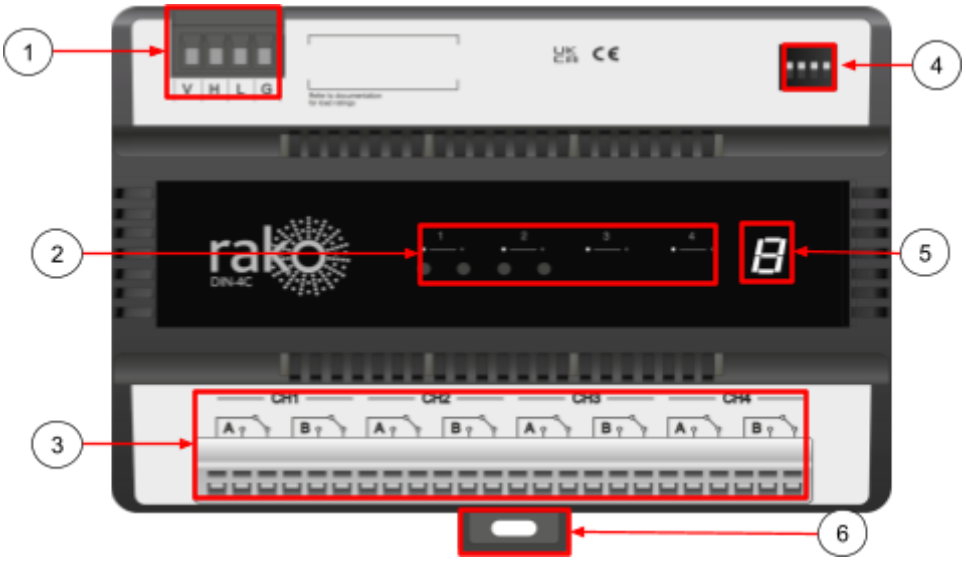

No.	Description
1	The input terminals for the DIN bus.
2	Each relay output of the DIN-4C has two LED indicators and a test button.
3	The motors are connected to four twin relay outputs.
4	Box number for identification during programming and operation.
5	Seven-segment display for diagnostic feedback.
6	Locks the DIN-4C to the DIN rail when the clip is pushed up.

3 DIN-LINK Modules

The DIN-LINK is used to communicate with four types of modules: DIN-4T, DIN-8S, DIN-4C and DIN-DLI.

Each DIN-LINK module is connected via the DIN bus. The DIN-LINK has a maximum capacity calculated in DIN Power Units (DPU). The maximum DPU per DIN-LINK is 64.

Device	Description	Diagram	DPU
DIN-4T	Four-channel trailing-edge dimmer module. It is suitable for controlling mains dimmable loads.		8
DIN-8S	Eight-channel relay module for on/off switching.		8
DIN-4C	A four-channel curtain and blind controller module.		8
DIN-DLI	Multi Room DALI Controller		16

4 Installation Instructions

⚠WARNING

- The overall safety of any system incorporating this equipment is the responsibility of the assembler of the end system.
- A qualified electrician must install the DIN module. Ensure all wiring follows local electrical standards. Use only appropriately rated cables, and secure all connections before powering on.
- The DIN module must be connected to a supply that includes appropriate protective devices. Failure to comply with these requirements may result in damage to the equipment, risk of fire, or electrical hazards.

1	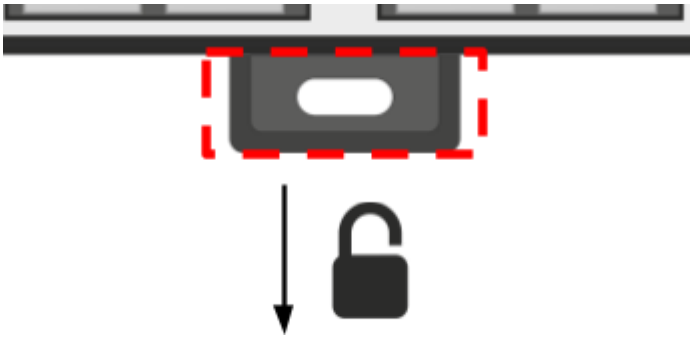	Pull down the DIN clamp at the bottom of the unit to unlock it.
2	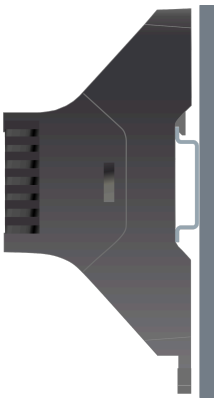	Once unlocked, place the DIN-4C over the DIN rail.

3		Push the clamp tab up to lock the DIN-4C to the DIN rail.
4	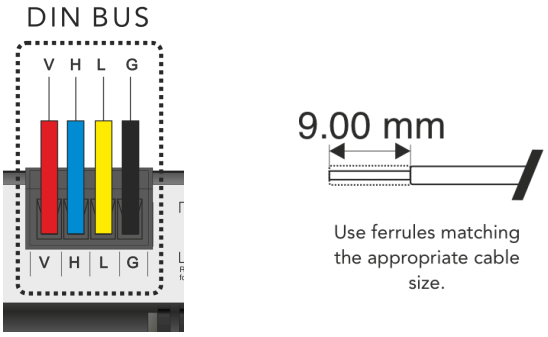	Connect the DIN bus to the top left terminals.
5	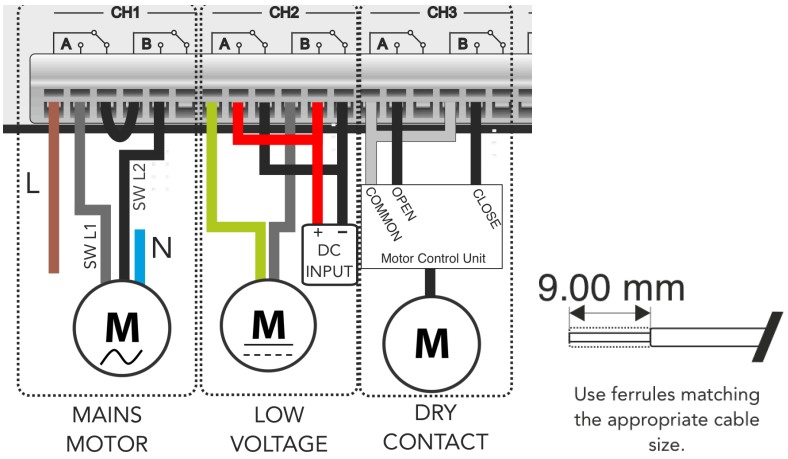	Connect the motor loads to the output terminals. For more information on wiring configurations, refer to the [Dual Relay Wiring Overview]().

5 Servicing the DIN-4C

The DIN-4C contains no user-serviceable parts; should the unit require a repair, it must be returned via the online form at https://returns.rakocontrols.com/contact/service-returns/.

If the DIN-4C has been returned from a repair, ensure it is operating correctly by testing the following:

- Check that the input voltage matches the required specifications to ensure proper operation of the unit and load.
- Use the override buttons to switch the outputs on and off. After each switch, test the voltage outputs to confirm they are functioning as expected.
- Ensure that the correct box number is set on the unit as per the configuration to ensure the correct identification within the system.
- Verify the communication functionality by testing the unit with either a Keypad or Rasoft Pro software.

6 Programming the DIN-4C

The DIN-4C is programmed using the Rasoft Pro programming software. A WK-HUB is required for any programming of a Rako Wired DIN system. Instructions for this can be found in the Wired System Setup Guide.

7 LED Diagnostics

7.1 Display

Bootloader When the DIN module is updating firmware, the device will be put into bootloader.	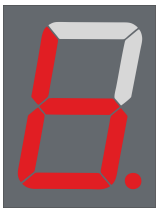
Bootloader Sleep Once a firmware update has commenced, the bootloader will enter Bootloader Sleep and wait for the upgrade to complete.	

Local Channel When receiving data from the DIN-LINK, the DIN module will flash 'L.' when receiving a command.	
Error When the test button is pressed, and there is an error communicating with the DIN module, 'E' will appear on the display.	

7.2 Output LEDs

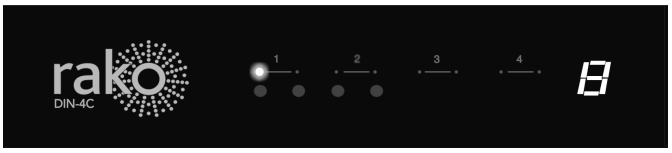

LED	Description	Pattern	Possible Cause
1-8 (Channel Specific)	Bootloader	Slow Flash ~1 seconds	The output is in bootloader; this occurs during the firmware upgrade process.

8 Installation Guidelines

⚠WARNING

If the equipment is used in a manner not specified by the manufacturer, the protection provided by the equipment may be impaired.

8.1 Electrical Isolation

A disconnect device must be provided in the installation and must be all-pole. It must be clearly labelled and positioned so that it is not obstructed by enclosures, wiring, or heavy equipment, ensuring easy access for maintenance and emergency disconnection.

Ensure the power supply is isolated before starting any installation or maintenance; failure to do so may result in electrical shock or injury.

8.2 Mounting

The DIN-4C module is designed for mounting on a DIN rail. Ensure the module is securely mounted within a compliant DIN enclosure using the appropriate fixings.

8.3 Enclosure and Environmental Protection

Install the DIN-4C module in a suitably rated enclosure that protects against dust, moisture, and other contaminants according to its environment; failure to do so may lead to damage or malfunction.

8.4 Maximum and Minimum Loadings

The load capacity of the DIN-4C module is load-type dependent; refer to the 'Load Types' section of the instruction manual to ensure the load is within the specified limits. Exceeding these limits may cause relay failure.

8.5 Overcurrent Protection

Install appropriate overcurrent protection in line with the module, based on the electrical load and supply, to protect the module from potential short circuits or overloads.

8.6 Wiring

All wiring should comply with the current local wiring regulations. This includes selecting the correct cable size, using appropriate termination methods, and ensuring mechanical protection for the wiring.

8.7 Ventilation and Cooling

Ensure sufficient ventilation within the DIN enclosure to prevent overheating. Poor ventilation can lead to overheating and module failure.

8.8 Compatibility

Verify that the DIN-4C module is compatible with other electrical components in the system. Incompatibility may result in malfunction, reduced performance, or damage to the module.

The DIN-4C should be connected to Rako devices only via the DIN bus.

Do not connect third-party devices to the Rako DIN bus.

8.9 Third-Party Accessories and Equipment

The installer is responsible for providing the necessary cables, isolators, electrical loads, and ferrules compatible with the terminals on the DIN-4C unit.

Refer to the manufacturer's instructions for all third-party devices.

All cables must be appropriately rated for the intended load and comply with the relevant electrical standards.

8.10 Sound Pressure Levels

The DIN-4C produces negligible sound pressure levels during normal operation (<70 dB(A) at 1 meter distance). The relays emit minor audible clicking sounds during switching operations.

Thank you for choosing Rako Controls; we hope that you are pleased with your system. Should you require further assistance, please contact us via our website, www.rakocontrols.com call our customer support helpline on 01634 226666. The office address is Rako Controls Ltd, Knight Road Rochester, ME2 2AH.

Appendix 1 - Wiring Options

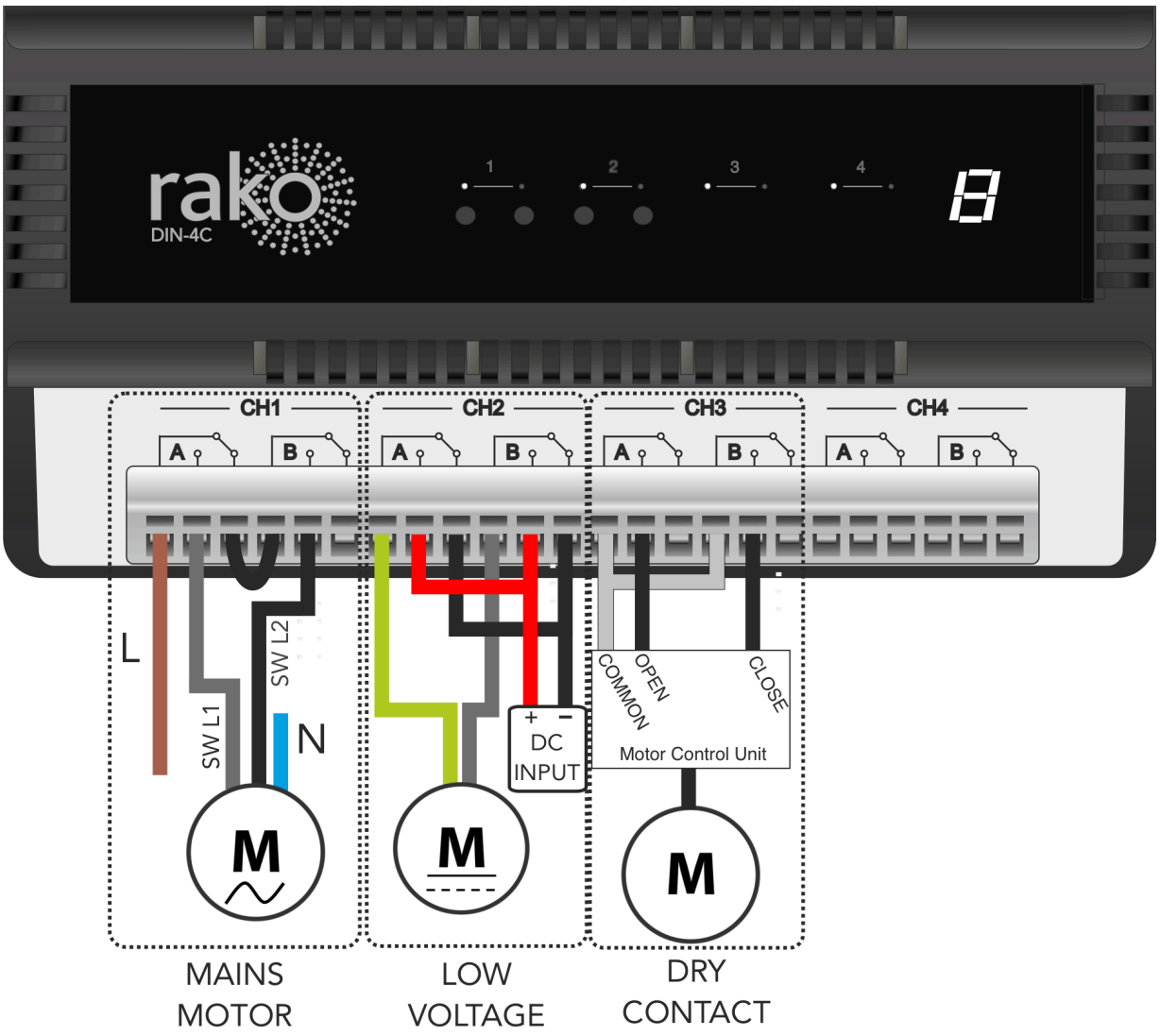

Appendix 2 - Relay Programming Menu

➔ To access the menu for programming the relays, right click the device on the channel list and select 'Go to (device)'

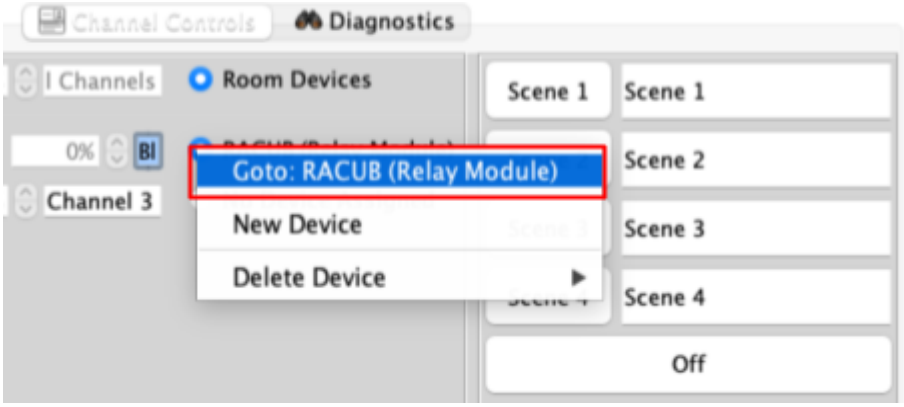

➔ Select 'Relay Module'

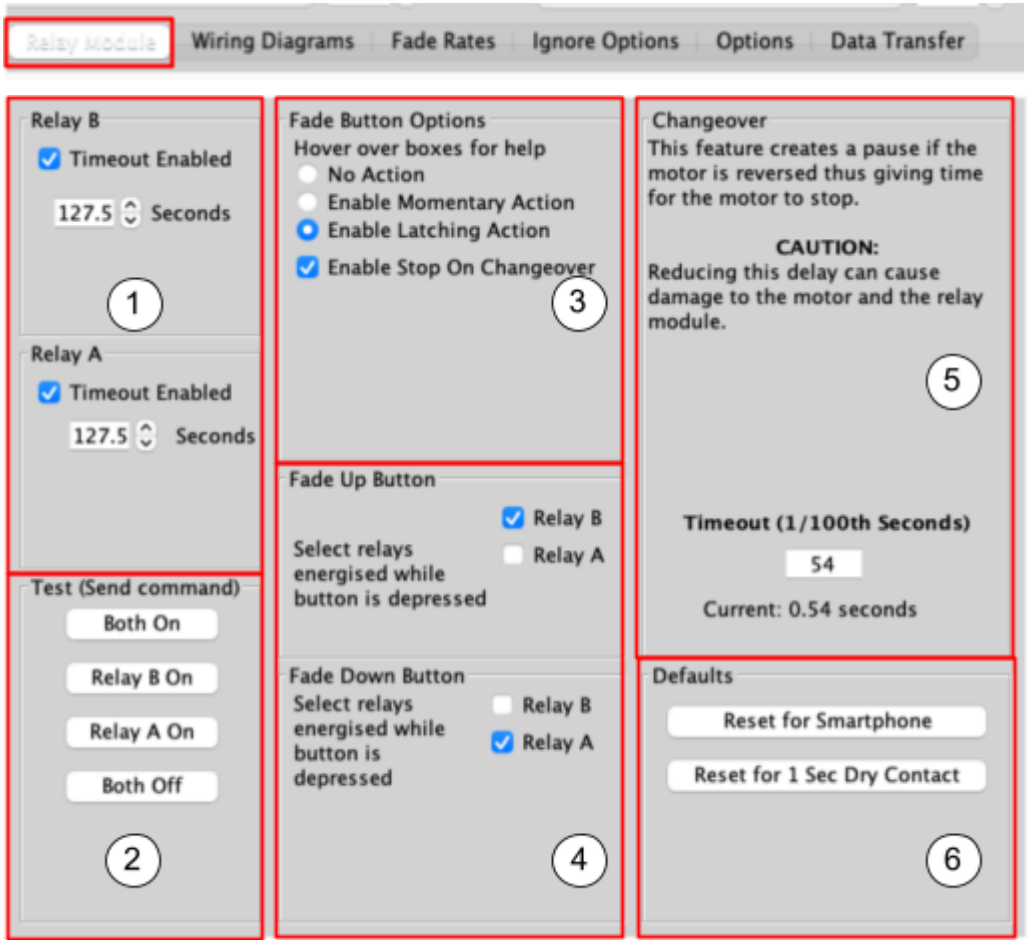

1. Relay Timeouts
Enabled by default. Defines the time (in seconds) before the relays disengage after activation.

2. Test
Sends test commands to the relays. Before testing, ensure the motor wiring complies with the manufacturer's instructions and that any required limits are set on the motor.

3. Fade Button Options

- No Action – Fade commands will have no effect on the motor.
- Enable Momentary Action – Relays engage only while the fade button is held. The relays will disengage when released. An optional setting allows the relay to latch after a specified time.
- Enable Latching Action – Relays engage when the button is pressed and disengage after the configured timeout (default: 127.5 seconds).

4. Fade Up / Fade Down Button
Assigns which relay is controlled by the Fade Up and Fade Down commands.

5. Changeover
Defines the delay between switching relays. It is recommended to leave this at the default setting, as reducing the delay may cause damage to the motor.

6. Defaults

- Reset for Smartphone – Restores default relay timeouts with latching action enabled.
- Reset for 1 Second Dry Contact – Sets relay timeouts to 1 second with momentary action. Commonly used with interfaces requiring dry contact pulses to control the motor.

Appendix 3 - Mixed Voltage Separation Example
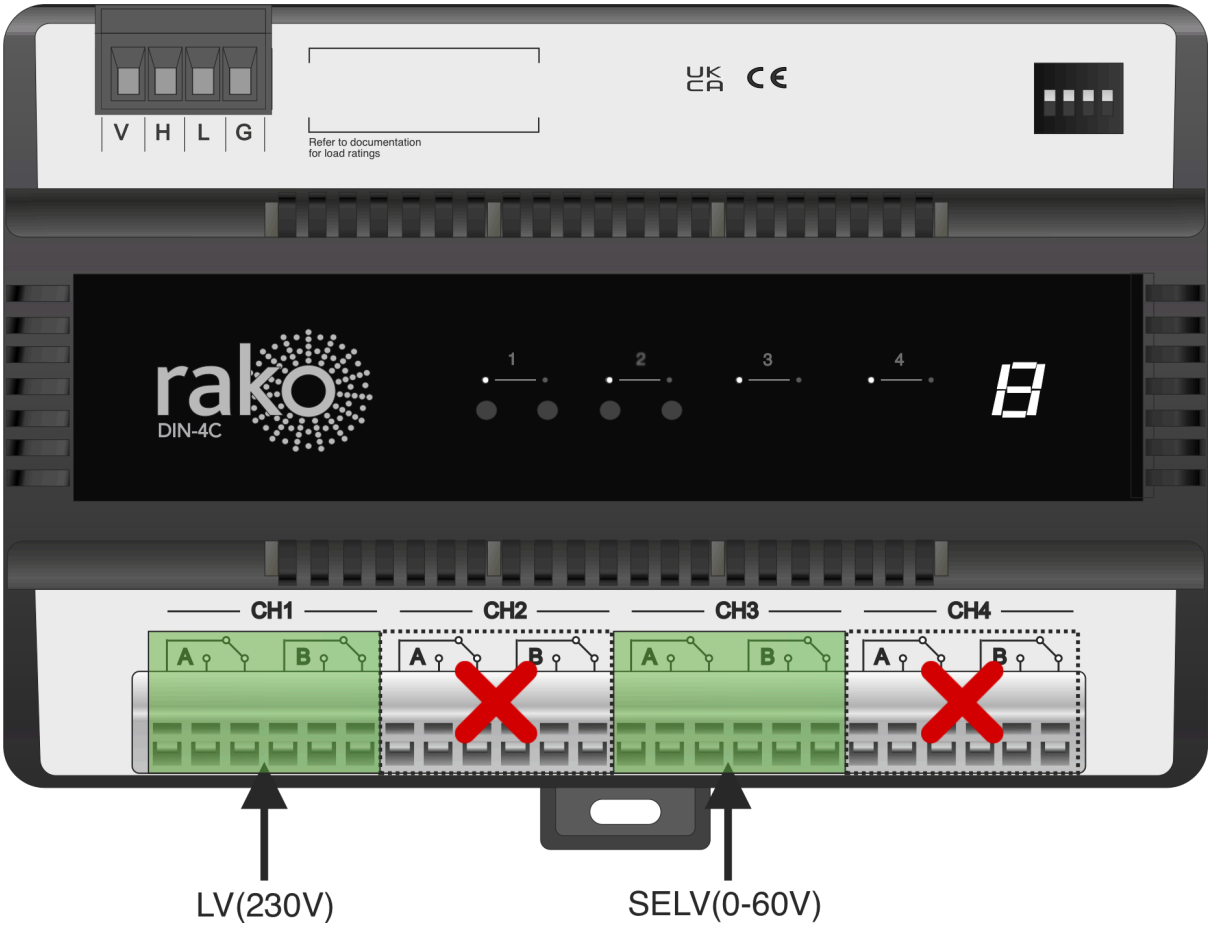
It is not advisable to mix LV and SELV in the same module, if it is unavoidable then the voltages must be separated by at least one channel width.